HVAC ABBREVIATIONS

SYMBOL	DESCRIPTION
AFF	ABOVE FINISHED FLOOR
AFR	ABOVE FINISHED ROOF
AHU	AIR HANDLING UNIT
AP	ACCESS PANEL
BOP	BOTTOM OF PIPE
BHP	BRAKE HORSEPOWER
BTU	BRITISH THERMAL UNIT
CFM	CUBIC FEET PER MINUTE
CHWR	CHILLED WATER RETURN
CHWS	CHILLED WATER SUPPLY
CT	COOLING TOWER
CU	CONDENSING UNIT
DDC	DIRECT DIGITAL CONTROLS
DN	DOWN
EAT	ENTERING AIR TEMPERATURE
EDH	ELECTRIC DUCT HEATER
EF	EXHAUST FAN
ESP	EXTERNAL STATIC PRESSURE
EWT	ENTERING WATER TEMPERATURE
FCU	FAN COIL UNIT
FF	FINAL FILTERS
FLA	FULL LOAD AMPS
FPM	FEET PER MINUTE
GPM	GALLONS PER MINUTE
KW	KILOWATT
LAT	LEAVING AIR TEMPERATURE
LWT	LEAVING WATER TEMPERATURE
MBH	THOUSAND BTUs PER HOUR
MCA	MINIMUM CIRCUIT AMPS
MOCP	MAXIMUM OVER CURRENT PROTECTION
MOD	MOTOR OPERATED CONTROL DAMPER (MOD)
NC	NORMALLY CLOSED
NO	NORMALLY OPEN
NTS	NOT TO SCALE
OA	OUTSIDE AIR
OAL	OUTSIDE AIR LOUVER
PRV	PRESSURE REDUCING VALVE
PRS	PRESSURE REDUCING STATION
PSI	POUNDS PER SQUARE INCH
PSIG	PSI GAUGE
PTAC	PACKAGED TERMINAL AIR CONDITIONER
RA	RETURN AIR
RHC	REHEAT COIL
RPM	REVOLUTIONS PER MINUTE
SA	SUPPLY AIR
SP	STATIC PRESSURE
TEMP	TEMPERATURE
TSP	TOTAL STATIC PRESSURE
UNO	UNLESS NOTED OTHERWISE
V / PH	VOLTS / PHASE
VAV	VARIABLE AIR VOLUMN
VFD	VARIABLE FREQUENCY DRIVE

HVAC PIPING SYMBOL LEGEND

SYMBOL	DESCRIPTION
CHWS	CHILLED WATER SUPPLY
CHWR	CHILLER WATER RETURN
CD	CONDENSATE
CR	CONDENSATE RETURN
PC	PUMPED CONDENSATE
HWR	HOT WATER RETURN
HWS	HOT WATER SUPPLY
	FLOW DIRECTION
	GATE VALVE
	BALL VALVE
	CALIBRATING BALANCING VALVE
	BUTTERFLY VALVE
	GAS COCK
	UNION
	STRAINER
	CONTROL VALVE
$	SOLENOID VALVE
	PSI REG.
	CHECK VALVE
	FLOW SWITCH
	FLEX CONNECTION
	O.S. & Y GATE VALVE
	THREE-WAY CONTROL VALVE
	THERMOMETER
EQUIP.	P-TRAP
	TWO-WAY CHECK VALVE
MV	MANUAL VENT
	PRESSURE GAUGE
	ELBOW, TURNED DOWN
	ELBOW, TURNED UP
	TEE, OUTLET DOWN
	TEE, OUTLET UP

EQUIPMENT

SYMBOL	DESCRIPTION
F-1	EXHAUST DUCT UP TO FAN ABOVE
F-1	EXHAUST FAN ON ROOF AND DUCT DROP TO BELOW
F-1	IN-LINE CENTRIFUGAL FAN
EQUIP.	P-TRAP

CONTROLS

SYMBOL	DESCRIPTION
T	THERMOSTAT / TEMPERATURE SENSOR
H	HUMIDISTAT / HUMIDITY SENSOR
M	MOTORIZED CONTROL DAMPER
TS	TEMPERATURE SENSOR
P	PRESSURE SENSOR
CO²	CO2 SENSOR

AIR DISTRIBUTION

SYMBOL	DESCRIPTION
QTY XA(FLOW) TAG CFM	AIR DISTRIBUTION DEVICE: SUPPLY (4-WAY BLOW UNLESS INDICATED BY FLOW ARROW'S)
QTY XA(FLOW) TAG CFM	AIR DISTRIBUTION DEVICE: RETURN
QTY XA(FLOW) TAG CFM	AIR DISTRIBUTION DEVICE: EXHAUST
R S	AIR TERMINAL DEVICE: SIDEWALL MOUNTED RETURN OR SUPPLY
DG	DOOR GRILLE: SEE ARCHITECTURAL DRAWINGS
UC	UNDERCUT DOOR: SEE ARCHITECTURAL DRAWINGS

LIFE SAFETY

SYMBOL	DESCRIPTION
FD	FIRE DAMPER WITH ACCESS DOOR PANEL
SD	SMOKE DAMPER WITH ACCESS DOOR PANEL
FSD	FIRE AND SMOKE DAMPER WITH ACCESS DOOR PANEL
	EXISTING FIRE DAMPER TO REMAIN WITH ACCESS DOOR PANEL, UNLESS OTHERWISE NOTED
	EXISTING FIRE AND SMOKE DAMPER TO REMAIN WITH ACCESS PANEL, UNLESS OTHERWISE NOTED
	DUCT SMOKE DETECTOR

DUCTWORK

SYMBOL	DESCRIPTION
24"x12"	NEW DUCTWORK, FIRST DIMENSION IS SIDE SHOWN PROVIDE EXTERNALLY INSULATED SHEET-METAL DUCT
DOWN UP	DUCT ELBOW POSITIVE PRESSURE (SUPPLY)
DOWN UP	DUCT ELBOW NEGATIVE PRESSURE (EXHAUST)
DOWN UP	DUCT ELBOW NEGATIVE PRESSURE (RETURN)
UP DN	CHANGE OF ELEVATION
	FLEXIBLE DUCT
	TRANSITION, CONCENTRIC
	TRANSITION, ECCENTRIC
10X8 8"Ø	TRANSITION, SQUARE TO ROUND
	SQUARE THROAT ELBOW WITH TURNING VANES
	RADIUS ELBOW
	RECTANGULAR / ROUND BRANCH TAKE-OFF OR ROUND / ROUND BRANCH TAKE-OFF
24"x12"	RECTANGULAR DUCTWORK
24"/12"	FLAT OVAL DUCTWORK
8"ø	ROUND DUCTWORK

GENERAL NOTES

1. **SCOPE:**
WORK SHALL INCLUDE ALL MATERIALS, EQUIPMENT AND LABOR NECESSARY FOR A COMPLETE AND PROPERLY FUNCTIONING MECHANICAL INSTALLATION IN ACCORDANCE WITH ALL APPLICABLE CODES AND CONTRACT DRAWINGS AND SPECIFICATIONS. WORK SHALL INCLUDE ALL WORK NORMALLY SPECIFIED IN DIVISION 23.

PAY FOR ALL REQUIRED LICENSES, FEES, INSPECTIONS AND PERMITS.

2. **CODES:**
INSTALL ALL WORK IN ACCORDANCE WITH THE LATEST EDITION OF ALL APPLICABLE REGULATIONS AND GOVERNING CODES, INCLUDING THE REGULATIONS OF THE UTILITY COMPANIES SERVING THE PROJECT.

WHERE A CONFLICT IN CODE REQUIREMENTS OCCURS THE MORE STRINGENT REQUIREMENT SHALL GOVERN.

3. **STANDARDS:**
ALL EQUIPMENT AND DEVICES SHALL BEAR U.L. LABEL, THE LABEL OF AN INDUSTRY RECOGNIZED APPROVED TESTING AGENCY OR A.G.A. CERTIFICATION FOR SAID ITEM OF EQUIPMENT OR DEVICE.

ALL ELECTRICAL DEVICES MUST BE U.L. APPROVED.

4. **DRAWINGS:**
DRAWINGS ARE DIAGRAMMATIC AND INDICATE THE GENERAL ARRANGEMENT AND EXTENT OF WORK. EXACT LOCATIONS AND ARRANGEMENT OF MATERIALS AND EQUIPMENT SHALL BE DETERMINED, WITH THE ACCEPTANCE OF THE ARCHITECT / ENGINEER, AS WORK PROGRESSES TO CONFORM IN THE BEST POSSIBLE MANNER WITH THE SURROUNDINGS AND WITH THE ADJOINING WORK OF OTHER TRADES. WHERE LOCATIONS OF EQUIPMENT, DEVICES OR FIXTURES ARE CONTROLLED BY ARCHITECTURAL FEATURES, ESTABLISH SUCH LOCATIONS BY REFERRING TO DIMENSIONS ON ARCHITECTURAL DRAWINGS AND NOT BY SCALING DRAWINGS.

5. **DISCREPANCIES:**
IN CASE OF DIFFERENCES BETWEEN DRAWINGS AND SPECIFICATIONS OR WHERE DRAWINGS AND SPECIFICATIONS ARE NOT CLEAR OR DEFINITE, THE SUBJECT SHALL BE REFERRED TO ARCHITECT / ENGINEER FOR CLARIFICATION AND INSTRUCTIONS.

6. **ELECTRICAL PROVISIONS:**
WORK INCLUDES VARIOUS ELECTRICAL REQUIREMENTS (A) WHICH INCORPORATE SPECIFIC ELECTRICAL FEATURES AND COMPONENTS WHICH ARE REQUIRED TO BE PHYSICALLY INTEGRAL WITH MECHANICAL EQUIPMENT, OR (B) WHICH REQUIRE NECESSARY ELECTRICAL INTERCONNECTING COMPONENTS FOR THE MECHANICAL SYSTEMS.

DEFINITIONS: DEFINITIONS FOR THE PURPOSE OF MECHANICAL / ELECTRICAL CONTROL AND POWER COORDINATION ARE AS GIVEN BELOW. ANY ITEMS WHICH DO NOT FALL WITHIN THE SCOPE OF THIS PARAGRAPH SHALL BE COORDINATED AS INDIVIDUALLY SPECIFIED.

'FURNISH' MEANS TO PROCURE AN ITEM AND TO DELIVER IT TO THE PROJECT FOR INSTALLATION.

'INSTALL' MEANS TO DETERMINE (IN COORDINATION WITH OTHERS AS NECESSARY) THE APPROPRIATE INTENDED LOCATION OF AN ITEM AND TO SET AND CONNECT IT IN PLACE.

'PROVIDE' MEANS TO BOTH FURNISH AND INSTALL.

7. **AUXILIARIES AND ACCESSORIES:**
INCLUDE ALL AUXILIARIES AND ACCESSORIES FOR A COMPLETE AND PROPERLY OPERATING SYSTEMS.

8. **INVESTIGATION OF SITE:**
CHECK SITE AND EXISTING CONDITIONS THOROUGHLY BEFORE PROVIDING A BID PRICE. ADVISE ARCHITECT / ENGINEER OF DISCREPANCIES OR QUESTIONS BEFORE BIDDING.

9. **COORDINATION:**
PROVIDE ALL REQUIRED COORDINATION AND SUPERVISION WHERE MECHANICAL WORK INTERFACES DIRECTLY OR INDIRECTLY WITH WORK OF ANY TRADES.

10. **PROVISIONS FOR OPENINGS:**
PROVIDE ALL REQUIRED OPENINGS TO ACCOMPLISH THE WORK. PROVIDE SLEEVES OR OTHER APPROVED METHODS TO ALLOW PASSAGE OF ITEMS INSTALLED.

11. **INTERRUPTION OF EXISTING SERVICES:**
ANY INTERRUPTION OF EXISTING MECHANICAL AND ELECTRICAL SERVICES SHALL BE COORDINATED IN ADVANCE WITH THE OWNER'S REPRESENTATIVE. THIS INCLUDES, BUT IS NOT LIMITED TO, SERVICES PROVIDING CHILLED WATER, ELECTRICITY OR OTHER CRITICAL SYSTEMS AS MAY BE PERTINENT TO THIS PARTICULAR PROJECT. SERVICE INTERRUPTION TIMES AND DURATION OF INTERRUPTION OF SERVICES SHALL BE DECIDED BY THE OWNER. PROVIDE APPROPRIATE PROVISIONS (E.G., ISOLATION SHUT-OFF VALVES, DAMPERS, END CAPS AND SIMILAR ITEMS) AS NECESSARY TO ACCOMMODATE THE REQUIRED SERVICE INTERRUPTIONS. IF SHUTDOWNS CANNOT BE ACCOMMODATED, PROVIDE MEANS FOR 'WET' TAPPING OR 'HOT' TAPPING OF PIPING SYSTEMS.

12. **CLEANING AND PROTECTION:**
EQUIPMENT: ALL MECHANICAL EQUIPMENT PROVIDED SHALL BE THOROUGHLY CLEANED OF ALL DIRT, OIL, CONCRETE, ETC...ANY DENTS, SCRATCHES OR OTHER VISIBLE BLEMISHES SHALL BE CORRECTED AND THE APPEARANCE OF THE EQUIPMENT MADE 'LIKE NEW' AND TO THE SATISFACTION OF THE ARCHITECT / ENGINEER.

UPON COMPLETION AND BEFORE FINAL ACCEPTANCE OF THE WORK, ALL DEBRIS, RUBBISH, LEFTOVER MATERIALS, TOOLS AND EQUIPMENT SHALL BE REMOVED FROM THE SITE.

PROTECTION OF WORK UNTIL FINAL ACCEPTANCE: PROTECT ALL MATERIALS AND EQUIPMENT FROM DAMAGE, ENTRANCE OF DIRT AND CONSTRUCTION DEBRIS FROM THE TIME OF INSTALLATION UNTIL FINAL ACCEPTANCE. ANY MATERIALS AND EQUIPMENT WHICH ARE DAMAGED SHALL BE REPAIRED TO 'AS NEW' CONDITION OR REPLACED AT THE DIRECTION OF THE ARCHITECT / ENGINEER. WHERE FACTORY FINISHES OCCUR AND DAMAGE IS MINOR, FINISHES MAY BE TOUCHED UP. IF, IN THE OPINION OF THE ARCHITECT / ENGINEER THE DAMAGE IS EXCESSIVE, FACTORY FINISH SHALL BE REPLACED TO 'NEW' CONDITION.

13. **SHOP DRAWINGS:**
SUBMIT SHOP DRAWINGS FOR ALL WORK INCLUDING ALL ITEMS, SERVICES AND SYSTEMS PROVIDED FOR THE PROJECT.

SHOP DRAWINGS SHALL CLEARLY SHOW THE FOLLOWING:

TECHNICAL AND DESCRIPTIVE DATA IN DETAIL EQUAL TO OR GREATER THAN THE DATA GIVEN IN THE ITEM SPECIFICATION. INDICATE ALL CHARACTERISTICS, SPECIAL MODIFICATIONS AND FEATURES. WHERE PERFORMANCE AND CHARACTERISTICS DATA SHALL BE PROVIDED IN A DEGREE WHICH IS BOTH QUANTITATIVELY AND QUALITATIVELY EQUAL TO THAT SPECIFIED AND SHOWN SO THAT COMPARISON CAN BE MADE. PRESENT DATA IN DETAIL EQUAL TO OR GREATER THAT THAT GIVEN IN ITEM SPECIFICATION AND INCLUDE ALL WEIGHTS, DEFLECTIONS, SPEEDS, VELOCITIES, PRESSURE DROPS, OPERATING TEMPERATURES, OPERATING CURVES, TEMPERATURE RANGES, SOUND RATINGS, DIMENSIONS, SIZES, MANUFACTURER'S NAMES, MODEL NUMBERS, TYPES OF MATERIAL USED, OPERATING PRESSURES, FULL LOAD AMPERAGES, STARTING AMPERAGES, FOULING FACTORS, CAPACITIES, SET POINTS, CHEMICAL COMPOSITIONS, CERTIFICATIONS AND ENDORSEMENTS, OPERATING VOLTAGES, THICKNESS, GAUGES AND ALL OTHER RELATED INFORMATION AS APPLICABLE TO PARTICULAR ITEMS.

EXCEPTIONS TO OR DEVIATIONS FROM THE CONTRACT DOCUMENTS. SHOULD ARCHITECT / ENGINEER ACCEPT ANY ITEMS HAVING SUCH DEVIATIONS WHICH ARE NOT CLEARLY BROUGHT TO ARCHITECT / ENGINEER'S ATTENTION, IN WRITING, ON ITEM SUBMITTAL, THEN CONTRACTOR IS RESPONSIBLE FOR CORRECTION OF SUCH DEVIATIONS REGARDLESS OF WHEN SUCH DEVIATIONS ARE DISCOVERED.

14. **SHOP DRAWINGS TECHNICAL INFORMATION BROCHURE:**
NEAR CONCLUSION OF WORK AND NOT LESS THAN 10 DAYS PRIOR TO SUBSTANTIAL COMPLETION INSPECTION, SUBMIT A TECHNICAL INFORMATION DOCUMENT (TID) CONTAINING ALL FINAL SHOP DRAWING AND SUBMITTAL INFORMATION FOR THE PROJECT. THIS TECHNICAL INFORMATION DOCUMENT SHALL CONSIST OF ONE OR MORE ADEQUATELY SIZED, HARD-COVER, 3-RING BINDER FOR 8-1/2" x 11" SHEETS.

SHOP DRAWING TECHNICAL AND DESCRIPTIVE DATA SHALL BE INSERTED IN THE TID IN PROPER ORDER ON ALL ITEMS. PROVIDE COMPLETE INFORMATION, INCLUDING, BUT NOT LIMITED TO, WIRING AND CONTROL DIAGRAMS, SCALE DRAWINGS SHOWING THAT PROPOSED SUBSTITUTE EQUIPMENT WILL FIT INTO ALLOTTED SPACE (INDICATE ALL SERVICE ACCESS, CONNECTIONS, ETC...), TEST DATA AND OTHER DATA REQUIRED TO DETERMINE IF EQUIPMENT COMPLIES FULLY WITH THE SPECIFICATIONS.

15. **OPERATING INSTRUCTIONS:**
SUBMIT FOR CHECKING A SPECIFIC SET OF WRITTEN OPERATING INSTRUCTIONS ON EACH ITEM WHICH REQUIRES INSTRUCTIONS TO OPERATE. AFTER ACCEPTANCE, INSERT INFORMATION IN EACH TECHNICAL INFORMATION DOCUMENT.

16. **MAINTENANCE INFORMATION:**
SUBMIT FOR ACCEPTANCE MAINTENANCE INFORMATION CONSISTING OF MANUFACTURER'S PRINTED INSTRUCTION AND PARTS LISTS FOR EACH MAJOR ITEM OF EQUIPMENT. AFTER ACCEPTANCE, INSERT INFORMATION IN EACH TECHNICAL INFORMATION DOCUMENT.

17. **SYSTEM GUARANTEE:**
PROVIDE A ONE YEAR GUARANTEE. THIS GUARANTEE SHALL BE BY THE CONTRACTOR TO THE OWNER TO REPLACE FOR THE OWNER ANY DEFECTIVE WORKMANSHIP, EQUIPMENT OR MATERIAL WHICH HAS BEEN FURNISHED UNDER THIS CONTRACT AT NO COST TO THE OWNER FOR A PERIOD OF ONE YEAR FROM THE DATE OF ACCEPTANCE OF THE SYSTEM. THIS GUARANTEE SHALL ALSO INCLUDE REASONABLE ADJUSTMENTS OF THE SYSTEM REQUIRED FOR PROPER OPERATION DURING THE GUARANTEE PERIOD. EXPLAIN THE PROVISIONS OF GUARANTEE TO OWNER AT THE 'INSTRUCTION IN OPERATION CONFERENCE'.

18. **INSTRUCTION TO OWNER:**
WHEN ALL WORK IS COMPLETED, PROVIDE THE OWNER AN 'INSTRUCTION IN OPERATION CONFERENCE'. AT THE CONFERENCE, THE CONTRACTOR SHALL REVIEW WITH THE OWNER ALL APPROPRIATE INFORMATION.

HVAC DUCTWORK SCHEDULE

TYPE / LOC.	SUPPLY AIR	RETURN AIR	EXHAUST AIR	OUTSIDE AIR
ABOVE CEILING	SHEET METAL EXT. FIBERGLASS WRAP	SHEET METAL EXT. FIBERGLASS WRAP	SHEET METAL SINGLE WALL NON-INSULATED	SHEET METAL EXTERIOR FIBERGLASS
EXPOSED (MECHANICAL ROOM)	SHEET METAL EXT. FIBERBOARD	SHEET METAL EXT. FIBERBOARD	SHEET METAL SINGLE WALL NON-INSULATED	WRAP SHEET METAL EXT. FIBERGLASS
EXPOSED (OCCUPIED AREA'S)	ROUND OR OVAL SHEET METAL DOUBLE WALL	ROUND OR OVAL SHEET METAL DOUBLE WALL	SHEET METAL SINGLE WALL NON-INSULATED	SHEET METAL DOUBLE WALL INSULATED

NOTES:
1. EXTERIOR WRAPPED DUCTS SHALL HAVE TWO COATS OF FABRIC AND MASTIC.
2. INSULATED DUCTS LOCATED IN OUTDOOR AREA'S SHALL HAVE 1/2" THICKER INSULATION THAN INDOOR APPLICATIONS.
3. FOR GENERAL DUCTWORK CONSTRUCTION ONLY. SEE PLANS FOR INDIVIDUAL CASES.
4. EXPOSED DUCTS LOCATED IN FINISHED SPACES SHALL BE PAINTED TO MATCH SURROUNDING STRUCTURE ABOVE THE DUCT UNLESS NOTED OTHERWISE.
5. EXPOSED DUCTS LOCATED IN FINISHED SPACES SHALL BE SUPPORTED BY CABLES. REFER TO DETAILS.
6. PROVIDE SHEET METAL TRANSITIONS BETWEEN LOUVERS AND DUCTWORK. INSULATED EXTERIOR OF SHEET METAL PLENUM WITH FIBER BOARD INSULATION IN CONCEALED LOCATIONS. PROVIDE DOUBLE WALL INSULATED SHEET METAL PLENUM IN EXPOSED LOCATIONS.
7. MAXIMUM DISTANCE OF FLEXIBLE BRANCH DUCTWORK TO AIR DEVICES SHALL BE 6 FEET WHERE LENGTH EXCEEDS 6 FEET. THE REMAINING BALANCE OF DUCTWORK SHALL BE EXTERNALLY INSULATED ROUND SNAPLOCK SHEET METAL DUCTWORK TO CONICAL BELLMOUTH SPIN-IN TAP AT MAIN DUCT TRUNK.
8. FLEXIBLE DUCTWORK SHALL BE FLEXMASTER TYPE 8M OR EQUAL.

RENOVATION

SYMBOL	DESCRIPTION
	CONNECT TO EXISTING
	DEMOLISH TO POINT INDICATED
24x12	NEW DUCTWORK TO BE PROVIDED
24x12	EXISTING DUCTWORK TO REMAIN
24x12	EXISTING DUCTWORK TO BE REMOVED
CWS	NEW PIPING TO BE PROVIDED
CWS	EXISTING PIPING TO REMAIN
CWS	EXISTING PIPING TO BE REMOVED
(2)10	RELOCATE EXISTING DEVICE, EXTEND RUN-OUT AS NEEDED. BALANCE TO FLOW INDICATED
A(2)10	*** PROVIDE NEW DEVICE AT NEW LOCATION. EXTEND RUN-OUT AS NEEDED AND BALANCE TO FLOW INDICATED

GENERAL TAGS

SYMBOL	DESCRIPTION
AHU-1	AIR HANDLING UNIT
F-1	FAN
RTU-1	ROOF TOP UNIT
CU-1	CONDENSING UNIT
VAV-1	VARIABLE AIR VOLUME TERMINAL UNIT
FPU-1	FAN POWERED VARIABLE VOLUME TERMINAL UNIT
EDH-1	ELECTRIC DUCT HEATER
P-1	PUMP
1	REVISION REFERENCE
1 M#	DETAIL REFERENCE: TOP: DETAIL # BOTTOM: DRAWING # DETAIL SHOWN ON
0	NEUTRAL RELATIVE PRESSURE
+	POSITIVE RELATIVE PRESSURE
-	NEGATIVE RELATIVE PRESSURE
1 1 1	KEY NOTE CALLOUT

DUCT ACCESSORIES

SYMBOL	DESCRIPTION
SA-1	SOUND ATTENUATOR
M	MOTOR OPERATED CONTROL DAMPER (MOD)
FM	AIR FLOW MEASURING STATION
	MANUAL BALANCING DAMPER
	ACCESS DOORS, VERTICAL OR HORIZONTAL
	FLEXIBLE CONNECTION
AF	CFM SENSOR
BD	BACKDRAFT DAMPER

CODE COMPLIANCE

1. TO THE BEST OF MY KNOWLEDGE, THESE PLANS AND SPECIFICATIONS ARE COMPLETE AND COMPLY WITH THE 2015 INTERNATIONAL BUILDING CODE, 2015 INTERNATIONAL FIRE PREVENTION CODE AND THE CODES REFERENCED WITHIN.

SHEET INDEX

SHEET NUMBER	SHEET NAME
M000	MECHANICAL LEGEND
M001	MECHANICAL SPECIFICATIONS
M301	FLOOR PLAN - MECHANICAL
M701	MECHANICAL CONTROLS
M801	MECHANICAL SCHEDULES
M901	MECHANICAL DETAILS

JUAN-JOSE BENITEZ
85646
LICENSED PROFESSIONAL ENGINEER
11-20-2020

VOLT AIR
CONSULTING ENGINEERS
5353 W. Alabama ST. SUITE 205
Houston, Texas 77056
Tel: 832-371.6181
www.VoltAirEngineers.com
Firm#: F-14583 Project #02.02.007

UNIVERSAL MATTER
900 SOUTH LOOP WEST, SUITE 175
HOUSTON TX 77054

Cyril architects
planning . architecture . interior

REVISION NOTES

Mk	Date	Description

SHEET DATA

Cyril Arch. Proj. No.: 20106

Issued For: PERMIT
Project Status

Issue Date: 11/20/2020

MECHANICAL LEGEND

M000

MECHANICAL SPECIFICATIONS

PART 1: GENERAL PROVISIONS: HEATING, VENTILATING AND AIR CONDITIONING:

PART 1 GENERAL PROVISIONS - HEATING, VENTILATING AND AIR CONDITIONING

1.1 RELATED DOCUMENTS:

A. DRAWINGS AND GENERAL PROVISIONS OF CONTRACT, INCLUDING GENERAL AND SUPPLEMENTARY CONDITIONS AND DIVISION 1 SPECIFICATION SECTIONS, APPLY TO THIS SECTION.

1.2 REGULATIONS AND PERMITS:

A. ALL WORK SHALL BE IN ACCORDANCE WITH THE TERMS AND CONDITIONS OF THE CONTRACT DOCUMENTS.

B. ALL WORK SHALL COMPLY WITH THE FOLLOWING CODES:

B.1. CURRENT EDITION OF THE INTERNATIONAL BUILDING CODE.
B.2. CITY OF HOUSTON AMENDMENTS.
B.3. NFPA 90A, STANDARD FOR THE INSTALLATION OF AIR-CONDITIONING AND VENTILATING SYSTEMS.
B.4. NFPA 90B, STANDARD FOR THE INSTALLATION OF WARM AIR HEATING AND AIR-CONDITIONING SYSTEMS.

C. WORK SHALL COMPLY WITH THE FOLLOWING STANDARDS:
C.1. AMERICAN SOCIETY OF HEATING, REFRIGERATION, AND AIR CONDITIONING ENGINEERS. (ASHRAE).
C.2. AMERICAN SOCIETY OF MECHANICAL ENGINEERS (ASME).
C.3. AMERICAN NATIONAL STANDARDS INSTITUTE (ANSI).
C.4. AMERICAN SOCIETY FOR TESTING AND MATERIALS. (ASTM)
C.5. UNDERWRITER'S LABORATORIES, INC. (UL).
C.6. SHEET METAL AND AIR CONDITIONING CONTRACTORS NATIONAL ASSOCIATION (SMACNA).
C.7. NATIONAL ELECTRICAL MANUFACTURER'S ASSOCIATION NEMA).
C.8. AMERICAN REFRIGERATION INSTITUTE (ARI).
C.9. ASSOCIATED AIR BALANCE COUNCIL (AABC).
C.10. AIR MOVEMENT AND CONTROL ASSOCIATION (AMCA).
C.11. NATIONAL FIRE PROTECTION ASSOCIATION (NFPA).
C.12. THERMAL INSULATION MANUFACTURER'S ASSOCIATION (TIMA).

D. THE CONTRACTOR SHALL MAKE ALL ARRANGEMENTS AND PAY FOR ALL FEES, CHARGES AND PERMITS REQUIRED AS WELL AS FOR ALL HAULING, RIGGING AND TRANSPORTATION CHARGES.

1.3 DESCRIPTION OF WORK:

A. THE WORK INCLUDED IN THIS SECTION SHALL COMPRISE ALL LABOR, MATERIALS, EQUIPMENT, MACHINERY AND SERVICE INCIDENTAL TO THE INSTALLATION OF A COMPLETE HEATING, COOLING AND VENTILATION SYSTEM AS HEREINAFTER SPECIFIED, AND SHOWN ON DRAWINGS.

B. THE CONTRACTOR SHALL LAY OUT HIS OWN WORK AND COORDINATE HIS WORK WITH THAT OF OTHER TRADES AND BE RESPONSIBLE FOR ALL MEASUREMENTS.

C. ALL WORK SHALL BE SUBJECT TO APPROVAL OF OWNER OR HIS REPRESENTATIVE.

D. WHERE SINGLE POINT ELECTRICAL CONNECTION IS CALLED FOR, PROVIDE ADDITIONAL OVER CURRENT PROTECTION AND WIRING BEYOND SINGLE POINT CONNECTION FOR HEATER AND FAN WHEN UNIT HAS TWO POINTS OF CONNECTION.

E. THE MECHANICAL CONTRACTOR SHALL SURVEY SITE AND STUDY CONTRACT DOCUMENTS PRIOR TO BEGINNING CONSTRUCTION. ALL PROBLEMS CONCERNING COORDINATION OF DIFFERING TRADES, INTERFERENCES, LACK OF CEILING CAVITY SPACE, OR ANY PROBLEMS IN UNDERSTANDING THE SPECIFICATIONS HEREIN AND DRAWINGS SHALL BE BROUGHT TO THE ATTENTION OF THE ARCHITECT/ENGINEER PRIOR TO CONSTRUCTION.

F. THE MECHANICAL CONTRACTOR SHALL FIELD VERIFY ALL BUILDING CONDITIONS PRIOR TO START OF WORK. ANY DISCREPANCIES BETWEEN ACTUAL CONDITIONS AND WHAT IS SHOWN ON PLANS THAT AFFECT THE WORK SHALL BE BROUGHT TO THE ARCHITECT/ENGINEER'S ATTENTION IMMEDIATELY.

G. THE WORK INCLUDES, BUT IS NOT LIMITED TO, THE FOLLOWING:
G.1. FURNISH AND INSTALL ALL TEMPERATURE CONTROLS AS HEREINAFTER SPECIFIED.

G.2. BALANCE HEATING, VENTILATING AND AIR CONDITIONING SYSTEM SO AS TO MEET SCHEDULES AND FOR PROPER AC WORKING ORDER.

G.3. FURNISH AND INSTALL ALL DUCTWORK AS SHOWN ON PLANS AND AS HEREIN SPECIFIED.

G.4. MECHANICAL CONTRACTOR SHALL PROVIDE ALL CONTROL WIRING REQUIRED TO PROVIDE A COMPLETE AUTOMATIC CONTROL SYSTEM. PROVIDE IN CONDUIT IN EXPOSED LOCATIONS AND WALLS. SUPPORT EVERY 3 FEET ABOVE CEILING USING J-HOOKS. CONTROL WIRING ABOVE CEILING SHALL BE PLENUM RATED.

H. THE ELECTRICAL PROVISIONS OF MECHANICAL WORK TO BE FURNISHED BY THE MECHANICAL CONTRACTOR CAN BE SUMMARIZED BY (BUT NOT LIMITED TO) THE FOLLOWING:

H.1. CONTROL SWITCHES, PILOT LIGHTS, INTERLOCKS AND SIMILAR DEVICES.
H.2. LOW VOLTAGE CONTROL WIRING.
H.3. OTHER EQUIPMENT, DEVICES, ETC., AS SPECIFIED AS MECHANICAL WORK IN THE FOLLOWING SPECIFICATIONS AND IN THE DRAWINGS.

1.4 PRODUCT HANDLING:

A. ALL MATERIALS SHALL BE HANDLED AND STORED IN A MANNER SO AS TO PREVENT DAMAGE. MATERIALS SHALL BE STORED UNDER COVER AND ABOVE GROUND.

B. ALL PRODUCTS SHALL BE SHIPPED TO THE JOB SITE IN UNOPENED CARTONS, CONTAINERS, ETC., AS RECEIVED FROM THE MANUFACTURER.

PART 2 PRODUCTS:

2.1 DUCTWORK:

A. ALL DUCTWORK SHALL BE FABRICATED AND INSTALLED IN STRICT ACCORDANCE WITH SMACNA STANDARDS.

B. TRANSFER AIR DUCTWORK SHALL GALVANIZED METAL DUCT.

C. SUPPLY AND RETURN DUCTWORK SHALL BE LOW PRESSURE GALVANIZED METAL DUCT AND SHALL BE EXTERNALLY WRAPPED WITH 2" FIBERGLASS INSULATION AND VAPOR BARRIER.

D. FURNISH AND INSTALL ALL EXTRACTORS, TURNING VANES, SPLITTER DAMPERS, FIRE DAMPERS, ETC., PER SMACNA AND AS SHOWN ON PLANS.

E. SEAL DUCTWORK AFTER INSTALLATION TO SEAL CLASS RECOMMENDED, AND METHOD PRESCRIBED IN SMACNA STANDARDS.

F. ALL DUCTWORK INSTALLED IN AN ATTIC, OR OTHER UNCONDITIONED SPACE, SHALL BE INSULATED. ALL METAL SUPPLY DUCTWORK INSTALLED IN A VENTILATED CRAWL SPACE OR OTHER NONCONDITIONED AREA SHALL BE INSULATED. INSULATION SHALL BE A MINIMUM 2 IN THICK, 3/4 POUND DENSITY BLANKET OR 1 IN THICK, 1-1/2 LB. DENSITY LINER. WHEN DUCTS USED FOR COOLING ARE EXTERNALLY INSULATED, THE INSULATION SHALL BE COVERED WITH A VAPOR BARRIER HAVING A MAXIMUM PERMEANCE OF 0.05 PERMS OR ALUMINUM FOIL HAVING A MINIMUM THICKNESS OF 2 MILS. WHEN NONMETALLIC DUCTS OR OTHER APPROVED INSULATING OR LINING MATERIALS ARE USED, THE MAXIMUM THERMAL CONDUCTANCE VALUE OF THE MATERIAL SHALL BE 0.23 AT 75 F. ALL EXTERIOR DUCTS AND INSULATION, SHALL BE PROPERLY PROTECTED WITH AN APPROVED WEATHERPROOF VAPOR BARRIER.

G. VIBRATION ISOLATION CONNECTORS BETWEEN DUCTS AND MECHANICAL SYSTEMS SHALL BE OF AN APPROVED FLAME RETARDANT FABRIC, AND SHALL BE 10 IN OR LESS IN LENGTH. ON COMMERCIAL SYSTEMS, A SLEEVE JOINT PACKED WITH AN APPROVED MATERIAL HAVING A MAXIMUM FLAMESPREAD RATING OF 25 AND MAXIMUM SMOKE DEVELOPED RATING OF 50 MAY BE USED.

2.2 CONTROLS:

A. THERMOSTATS (BASIS OF DESIGN):

A.1. PROVIDE BUILDING STANDARD THERMOSTAT.

2.3 SEALANTS:

A. ALL VOIDS, CRACKS, HOLES AND SPACES AROUND DUCTS AND PIPES PENETRATING FIRE RATED CEILINGS AND WALLS SHALL BE SEALED USING 3 M BRAND "FIRE BARRIER" CAULK # CP 25 OR PUTTY #303. THE CAULK OR PUTTY SHALL BE A ONE PART, INTUMESCENT ELASTOMER. UNDER NORMAL ENVIRONMENTAL CONDITIONS THE MATERIAL SHALL BE NON CORROSIVE TO METAL. WHEN EXPOSED TO FLAME OR HEAT, IT SHALL BE CAPABLE OF EXPANDING UP TO 10 TIMES.

PART 3 EXECUTION:

3.1 ERECTION AND WORKMANSHIP:

A. THE CONTRACTOR SHALL ADAPT HIS WORK TO JOB CONDITIONS AND MAKE SUCH CHANGES AS REQUIRED AND PERMITTED BY THE ARCHITECT, SUCH AS MOVING HIS WORK TO CLEAR BEAMS, JOISTS, LIGHT FIXTURES, AND ADJUSTING HIS RISERS OR OTHER APPARATUS TO AVOID INTERFERENCES WITH WINDOWS AND OPENINGS; OR RAISING OR LOWERING HIS WORK TO PERMIT THE PASSING OF DUCTWORK OR THE WORK OF OTHER TRADES; ALL AS REQUIRED OR AS JOB CONDITIONS DICTATE, WITHOUT ANY ADDITIONAL COSTS TO THE OWNER.

B. ALL APPLIANCES AND EQUIPMENT SHALL BE INSTALLED AND CONNECTED WITH THE BEST ENGINEERING PRACTICES AND IN ACCORDANCE WITH THE MANUFACTURERS BEST INSTRUCTIONS AND RECOMMENDATIONS. ALL PIPING, VALVES, CONNECTIONS, AND SIMILAR ITEMS RECOMMENDED BY THE MANUFACTURER OR AS REQUIRED FOR PROPER OPERATION SHALL BE PROVIDED COMPLETE, WITHOUT ADDITIONAL COST TO THE OWNER.

C. ALL PIPES, FIXTURES, TRAPS, EQUIPMENT, AND OTHER PARTS OF THE CONTRACTOR'S WORK SHALL BE PROTECTED AGAINST INJURY BY FREEZING OR OTHER MEANS DURING CONSTRUCTION. CONTRACTOR SHALL IDENTIFY ALL ITEMS REQUIRED FOR COMPLETE INSTALLATION AND COMPARE TO EQUIPMENT TO BE FURNISHED. ANY ADDITIONAL REQUIREMENTS SHALL BE BROUGHT TO THE ATTENTION OF THE ENGINEER PRIOR TO INSTALLATION.

D. UPON COMPLETION, AND BEFORE FINAL ACCEPTANCE OF THE WORK, ALL DEBRIS, RUBBISH, LEFTOVER MATERIALS, TOOLS, AND EQUIPMENT SHALL BE REMOVED FROM THE SITE.

E. ALL SECTIONS OF THE HEATING AND COOLING SYSTEM, UPON COMPLETION, SHALL BE THOROUGHLY CLEANED TO REMOVE ALL DIRT, DEBRIS, ETC., BEFORE THE SYSTEM IS PUT INTO OPERATION.

3.2 GUARANTEE AND SERVICE:

A. THE CONTRACTOR SHALL GUARANTEE ALL MATERIALS AND WORKMANSHIP FOR A PERIOD OF ONE (1) YEAR AFTER DATE OF ACCEPTANCE WITH AN ADDITIONAL FOUR (4) YEAR WARRANTY ON ALL COMPRESSORS, AND SHALL REPAIR OR REPLACE AT NO ADDITIONAL COST TO THE OWNER, ANY PART THEREOF WHICH MAY BECOME DEFECTIVE WITHIN THE PERIOD OF GUARANTEE, ORDINARY WEAR AND TEAR EXPECTED. THE CONTRACTOR SHALL BE RESPONSIBLE FOR AND PAY FOR ANY DAMAGE CAUSED BY OR RESULTING FROM DEFECTS IN HIS WORK.

B. IN ADDITION, CONTRACTOR SHALL PROVIDE FREE SERVICE, INSPECTION AND ADJUSTMENT OF THE COMPLETE SYSTEM, INCLUDING ALL CONTROLS, AND ANY NECESSARY BALANCING AND ADJUSTMENTS WHICH MAY DEVELOP FOR ONE (1) YEAR BEGINNING FROM DATE OF ACCEPTANCE EXCEPT FOR OILING OF MOTORS AND REPLACING AIR FILTERS.

3.3 TEST AND BALANCE:

A. MECHANICAL CONTRACTOR SHALL TEST AND BALANCE ALL AIR AND WATER SYSTEMS IN ACCORDANCE WITH AND BY A CERTIFIED TEST AND BALANCE AGENCY IN ACCORDANCE WITH ASSOCIATED AIR BALANCE COUNCIL (AABC).

B. THE HEATING, VENTILATING AND/OR COOLING SYSTEMS INSTALLED UNDER THIS CONTRACT SHALL BE TESTED TO DEMONSTRATE THAT SPECIFIED CAPACITIES OF THE VARIOUS PARTS OF THE SYSTEM AS SHOWN ON THE DRAWINGS CAN BE MET.

C. A DIRECT READING VELOCITY INSTRUMENT THAT HAS BEEN RECENTLY TESTED AND CALIBRATED SHALL BE USED TO TEST THE AIR FLOW IN THE VARIOUS DUCT INLETS AND OUTLETS.

D. THE CONTRACTOR SHALL REGULATE AND ADJUST ALL SPLITTER, DEFLECTORS AND DAMPERS SO THAT THE INLET OR OUTLET SHALL DELIVER OR REMOVE THE REQUIRED NUMBER OF CUBIC FEET OF AIR PER MINUTE (CFM) AT THE RESPECTIVE OPENINGS.

E. THIS SHALL INCLUDE SETTING UP DAMPER POSITION FOR MINIMUM OUTSIDE AIR DAMPERS AND SHALL BE MARKED AS SAME.

F. ALL TESTS SHALL BE CONDUCTED IN THE PRESENCE OF THE CONSTRUCTION SUPERINTENDENT, OR HIS REPRESENTATIVE AND HE SHALL BE NOTIFIED 2 DAYS PRIOR TO THE TIME OF TESTING.

G. THE CONTRACTOR SHALL FURNISH ALL INSTRUMENTS, TESTING EQUIPMENT AND PERSONNEL THAT MAY BE REQUIRED FOR THE TESTS.

H. THE CONTRACTOR SHALL SUBMIT TO ARCHITECT/ENGINEER TWO (2) COPIES OF HIS FINAL CERTIFIED TEST READINGS WITH THE FOLLOWING INFORMATION:

1. STATIC RESISTANCE IN INCHES OF WATER INTAKE AND DISCHARGE FOR EACH SYSTEM.

2. THE RPM OF EACH FAN OR UNIT.

3. THE VOLUME OF AIR HANDLED BY EACH FAN OR UNIT (QUANTITIES OF SUPPLY, RETURN, OUTSIDE AIR).

3.4 VIBRATION AND NOISE:

A. PROVIDE APPROVED VIBRATION ISOLATORS AND ACOUSTIC INSULATION AS REQUIRED TO ELIMINATE ANY OBJECTIONABLE NOISE OR VIBRATION RESULTING FROM THE OPERATING OF THE AIR CONDITIONING, HEATING AND VENTILATING SYSTEMS.

JUAN-JOSE BENITEZ
85646
LICENSED
PROFESSIONAL ENGINEER
11-20-2020

VOLT AIR
CONSULTING ENGINEERS
5353 W. Alabama ST. SUITE 205
Houston, Texas 77056
Tel: 832-371.5181
www.VoltAirEngineers.com
Firm#: F-14583 Project #02.02.007

UNIVERSAL MATTER
900 SOUTH LOOP WEST, SUITE 175
HOUSTON TX 77054

Cyril architects
planning . architecture . interior

REVISION NOTES

Mk	Date	Description

SHEET DATA

Cyril Arch. Proj. No.: 20106

Issued For: PERMIT
Project Status

Issue Date: 11/20/2020

MECHANICAL SPECIFICATIONS

M001

GENERAL NOTES

A. PROVIDE VOLUME DAMPERS AT ALL BRANCH TAKE-OFFS SERVING SINGLE DIFFUSERS GRILLE OR REGISTERS.
B. PROVIDE TURNING VANES IN ALL RECTANGULA ELBOWS.
C. MAINTAIN A MINIMUM OF 6" CLEAR BETWEEN DUCTWORK AND RATED WALLS.
D. COORDINATE DUCTWORK WITH STRUCTURE. PREPARE COORDINATION DRAWINGS AS SPECIFIED.
E. PROVIDE REMOTE DAMPER OPERATORS FOR VOLUME DAMPERS LOCATED ABOVE INACCESSIBLE CEILINGS.
F. PROVIDE ALL CODE REQUIRED AND MANUFACTURERSR RECOMMENDED CLEARANCES FOR ALL EQUIPMENT.
G. ALL DUCTWORK DIMENSIONS ARE INSIDE CLEAR DIMENSIONS.

KEYNOTES (?)

NUMBER	NOTES
1	EXISTING ROOF TOP UNIT AND ASSOCIATED DUCTWORK TO BE REMOVED.
2	EXISTING AIR DEVICES TO BE REUSED, CLEAN, PAINT, AND REFURBISH TO A LIKE NEW CONDITION BEFORE RE-INSTALLATION, TYPICAL.
3	EXISTING ROOF TOP UNIT TO BE REMOVED. DISCONNECT AND REMOVE ALL ASSOCIATED DUCT WORK, AIR DEVICES,
4	EXISTING THERMOSTAT TO BE RE-USED.
5	EXISTING DUCTWORK TO BE REMOVED, TYPICAL.
6	CAP DUCT AT WALL.
7	EXISTING THERMOSTAT TO BE REFURBISHED AND RECALIBRATED TO A LIKE NEW CONDITION.
8	NEW ROOF TOP UNIT. REPLACE CURB ADAPTOR AS REQUIRED. MODIFY EXISTING ROOF OPENINGS TO ACCOMMODATE NEW DUCTS.
9	ROUTE 8"X8" EXHAUST DUCT UP TO ROOF MOUNTED EXHAUST FAN. TRANSITION TO FAN'S CONNECTION SIZE BELOW ROOF.
10	PROVIDE 22 X 14 RETURN AIR PLENUM.
11	10" DIAMETER DUCT DOWN TO 36" BELOW CEILING FOR CONNECTION TO SNORKEL VENT EXTRACTOR. INSTALL OWNER PROVIDED IN-LINE ROOF MOUNTED EXHAUST FAN. REPAIR ROOF AND SEAL WEATHER PROOF.
12	10" DIAMETER DUCT UP THROUGH ROOF TO ROOF MOUNTED EXHAUST FAN. REPAIR ROOF AND SEAL WEATHER PROOF.
13	OWNER PROVIDED ROOF MOUNTED EXHAUST FAN, REFER TO H/M901 FOR DETAIL.

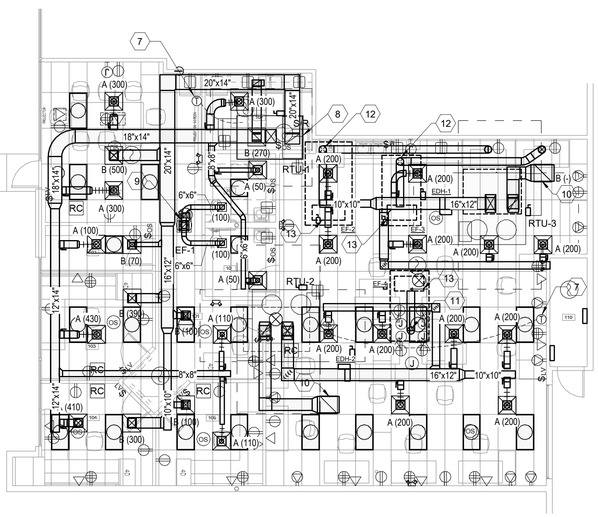

2 FLOOR PLAN - MECHANICAL
1/8" = 1'-0"

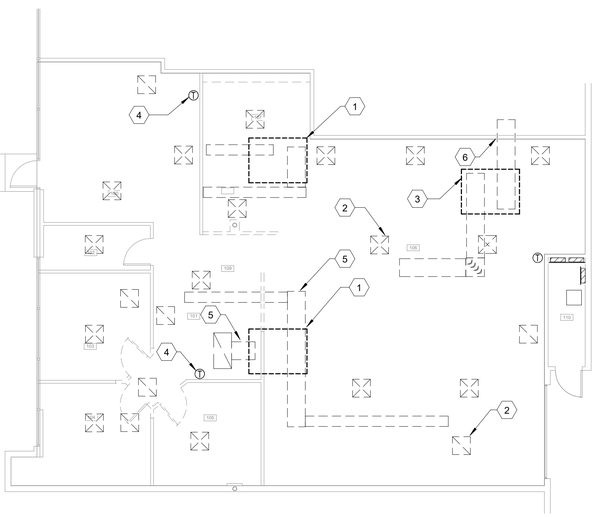

1 DEMOLITION PLAN PLAN - MECHANICAL
1/8" = 1'-0"

VOLT AIR CONSULTING ENGINEERS
5353 W. Alabama ST. SUITE 205
Houston, Texas 77056
Tel: 832.371.5181
www.VoltAirEngineers.com
Firm#: F-14583 Project #02.02.007

UNIVERSAL MATTER
900 SOUTH LOOP WEST, SUITE 175
HOUSTON TX 77054

Cyril architects
planning . architecture . interior

REVISION NOTES

Mk	Date	Description

SHEET DATA

Cyril Arch. Proj. No.: 20106
Issued For: PERMIT
Project Status
Issue Date: 11/20/2020

FLOOR PLAN - MECHANICAL

M301

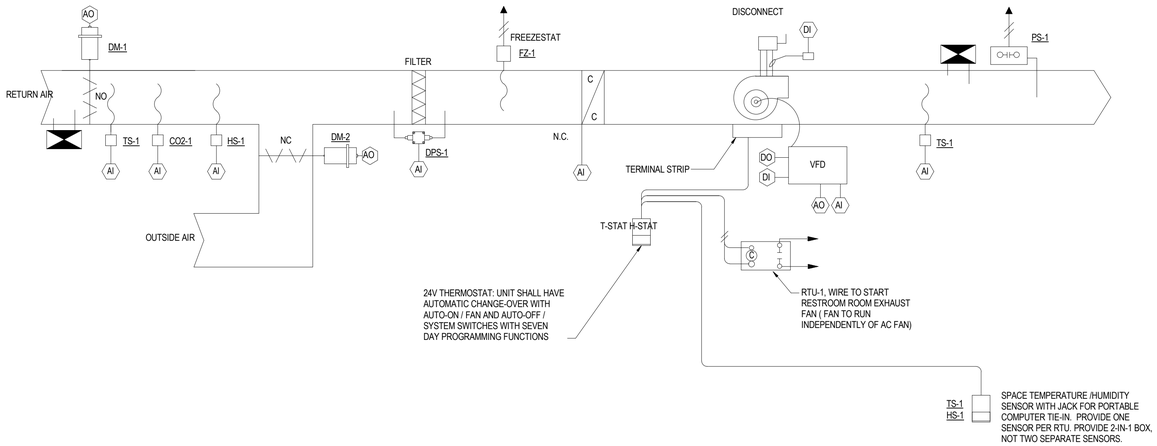

RTU CONTROL:

RTU SYSTEM CONSISTS OF A SUPPLY FAN WITH COOLING COILS WITH MODULATING COMPRESSORS AND MODULATING ELECTRIC PRE-HEAT COIL.

COPY

OCCUPIED MODE:

RTU WILL ENTER THE OCCUPIED MODE WHEN SCHEDULED BY THE PROGRAMMABLE THERMOSTAT.

IN THE OCCUPIED MODE, THE DIGITAL COMPRESSOR SHALL MODULATE TO MAINTAIN THE COOLING COIL LEAVING AIR TEMPERATURE SETPOINT OF 54° F (ADJ.).

THE HEATING COIL CONTROL SHALL MODULATE TO MAINTAIN THE RETURN AIR TEMPERATURE SETPOINT.

RETURN AIR TEMPERATURE SETPOINTS SHALL BE RESET TO AN ADJUSTABLE NIGHT SETBACK SETPOINT WHEN INDEXED BY PROGRAMMABLE THERMOSTAT.

IF THE SUPPLY FAN FAILS, THE PROGRAMMABLE THERMOSTAT SHALL ALARM.

RETURN AIR HUMIDITY SHALL BE MONITORED. IF RETURN AIR HUMIDITY IS WITHIN SETPOINT AND ZONE TEMPERATURE IS SATISFIED, THEN THE SUPPLY AIR TEMPERATURE SETPOINT SHALL INCREASE BY 2° F (ADJ.) EVERY 15 MINUTES (ADJ.). IF RETURN AIR HUMIDITY EXCEEDS 60% SETPOINT (ADJ.), OR ZONE TEMPERATURE IS NO LONGER SATISFIED, THEN THE SETPOINT SHALL RESET DOWN IN A SIMILAR FASHION.

UNOCCUPIED MODE

RTU WILL ENTER THE UNOCCUPIED MODE WHEN SCHEDULED BY THE PROGRAMMABLE THERMOSTAT.

IN THE UNOCCUPIED MODE, RETURN AIR TEMPERATURE SETPOINTS SHALL BE RESET TO AN ADJUSTABLE NIGHT SETBACK SETPOINT.

RTU CONTROL DIAGRAM — A

	SMOKE DETECTOR
SDM-XX	SMOKE DAMPER ACTUATOR
DM-XX	CONTROL DAMPER ACTUATOR
FM-XX	AIR FLOW MEASURING STATION
AI TS-XX	DUCT TEMPERATURE SENSOR (AVERAGING)
TS-XX	SPACE TEMPERATURE SENSOR
AI TS-XX	IMMERSION TEMPERATURE SENSOR
AO CV-1	CONTROL VALVE
HS-XX	HUMIDITY SENSOR
FZ-XX	FREEZESTAT
SP-XX	STATIC PRESSURE SENSOR
DPS-XX	DIFFERENTIAL PRESSURE SWITCH
DPT-XX	DIFFERENTIAL PRESSURE SENSOR
FT-XX	WATER FLOW TRANSMITTER
	INPUT/OUTPUT POINT TO DDC CONTROL PANEL

TS	TEMPERATURE SENSOR
CV	CONTROL VALVE
DI	DIGITAL INPUT
DO	DIGITAL OUTPUT
AI	ANALOG INPUT
EP	ELECTRIC PNUEMATIC
AO	ANALOG OUTPUT
VP	VELOCITY PRESSURE SENSOR
HS	HUMIDITY SENSOR
- - - -	ELECTRIC/ELECTRONIC WIRE

LEGEND AND ABBREVIATIONS — E

VOLT AIR CONSULTING ENGINEERS
5353 W. Alabama ST. SUITE 205
Houston, Texas 77056
Tel: 832-371.5181
www.VoltAirEngineers.com
Firm#: F-14583 Project #02.02.007

JUAN-JOSE BENITEZ
85646
LICENSED PROFESSIONAL ENGINEER
11-20-2020

UNIVERSAL MATTER
900 SOUTH LOOP WEST, SUITE 175
HOUSTON TX 77054

Cyril architects
planning . architecture . interior

REVISION NOTES

Mk	Date	Description

SHEET DATA

Cyril Arch. Proj. No.: 20106

Issued For: PERMIT
Project Status

Issue Date: 11/20/2020

MECHANICAL CONTROLS

M701

ROOFTOP DX UNIT SCHEDULE

PLAN MARK	MODEL NUMBER	TOTAL AIR CFM	OUTSIDE AIR CFM	NOMINAL TONS	EXT. S.P.	FAN HP	NET COOLING CAPACITY TOT. MBH	SENS. MBH	EAT DB	EAT WB	LAT DB	LAT WB	ELECTRICAL DATA # COMP/ # STAGES.	COMP. RLA(EA)	NO. FANS	COND. FLA(EA)	HEATING KW/STEP	LAT (DEG. F)	BLOWER FAN FLA	MCA	MOCP SIZE	VOLT/ PHASE	UNIT WEIGHT (LBS)
RTU-1	LENNOX MOD # KCB092S4B	2400	470	7.5	1.5	2.0	71.2	61.4	83.0	66.1	56.7	54.1	2 / 2	12.2	1	2.6	18/2	90	3.4	39.0	40	460/3	800
RTU-2	DAIKIN MOD # DPS007A	1200	850	7.5	1.5	2.3	86.6	52.0	97	77	55.6	55.6	2 / 3	5.4/3.9	2	1.8	-	-	-	14.8	20	460/3	2024
RTU-3	DAIKIN MOD # DPS007A	1200	850	7.5	1.5	2.3	86.6	52.0	97	77	55.6	55.6	2 / 3	5.4/3.9	2	1.8	-	-	-	14.8	20	460/3	2024

NOTES:
1. MANUFACTURERS: LENNOX & DAIKIN OR APPROVED SUBSTITUTE. R-410A REFRIGERANT. 12.5 EER AT AHRI.
2. AIR HANDLING UNIT AND ASSOCIATED EXHAUST FAN SHALL SHUT DOWN UPON FIRE ALARM SIGNAL, DUCT SMOKE DETECTOR SENSING PRODUCTS OF COMBUSTION OR MANUAL ACTUATION OF AHU OR EXHAUST STARTER TO "OFF" POSITION.
3. PROVIDE WITH 30% EFFICIENCY FILTERS IN COMPLIANCE WITH ASHRAE STANDARDS 52.1-1992. PROVIDE 3-SETS. PROVIDE HINGED ACCESS DOOR FOR FILTER SECTION.
4. HEAD PRESSURE CONTROLLER FOR OPERATION IN AMBIENT TEMPERATURES DOWN TO 30° F.
5. PROVIDE UNIT(S) WITH FACTORY MOUNTED DISCONNECT(S).
6. PROVIDE SINGLE POINT ELECTRICAL CONNECTION FOR COMPRESSOR, FAN, HEATING ELEMENT AND CONTROLS AS PART OF PACKAGED UNIT.
7. AMBIENT DESIGN TEMP IS 95° F.
8. FACTORY BACNET INTERFACE FOR BUILDING LEVEL CONTROL SYSTEM AND FRONT END ANDOVER CONTROLLER PROVIDED BY FACILITY AUTOMATION SOLUTIONS.
9. FIELD INSTALLED TEMPERATURE AND HUMIDITY ZONE SENSORS, DIGITAL DISPLAY - BACNET AND RTU UNIT COMPATIBLE, BY FACILITY AUTOMATION SOLUTIONS.
10. FACTORY PROVIDED 18 INCH CURB.
11. PROVIDE FACTORY MOUNTED MOTORIZED OUTDOOR AIR DAMPER AND WEATHER HOOD.
12. PROVIDE WITH FACTORY MOUNTED SUPPLY AND RETURN DUCT SMOKE DETECTORS.
13. PROVIDE WITH FACTORY MOUNTED CONDENSATE OVERFLOW SWITCH.
14. PROVIDE HAIL GUARD, WIRE MESH SCREENS NOT ACCEPTABLE.
15. UNIT SHALL BE PROVIDED WITH HOT GAS REHEAT.
16. FOR MORE INFORMATION ON THE EQUIPMENT CONTACT BEN RICHBOURG AT TEXAS AIR SYSTEMS (832-342-7000).
17. RTU-2 & RTU-3 ONLY, PROVIDE BUILDING STATIC PRESSURE SENSOR INTERLOCKED WITH UNIT'S FAN VFD TO MAINTAIN 0.02" + POSITIVE STATIC PRESSURE IN WORK AREA ONLY.

FAN SCHEDULE

PLAN MARK	PRODUCT MANUFACTURER	MODEL N0.	TYPE	CFM	STATIC PRESS. IN. WG.	FAN RPM	MOTOR RPM	HP	ECM MOTOR	VOLT/ PHASE	DRIVE TYPE	SONES	ACCESSORIES	INTERLOCKS
EF-1	GREENHECK	G-097-A	DOWN-BLAST	200	.3	1232	1725	1/4	YES	115/1	DIRECT	11.7	1,4,5,10, 28	RTU-1
EF-2	OWNER PROVIDED	-	UP-BLAST	875	-	-	-	1/2	-	115/1	BELT	-	1, 8, 28	FUME HOOD
EF-3	OWNER PROVIDED	-	UP-BLAST	770	-	-	-	1/2	-	115/1	BELT	-	1, 8, 28	FUME HOOD
EF-4	OWNER PROVIDED	-	UP-BLAST	1000	-	-	-	1/2	-	115/1	BELT	-	1, 8, 28	LOCAL CONTROL

NOTES:
1. WHEN EF-4 IS ENERGIZED EF-2 AND EF-3 SHALL BE DE-ENERGIZED.
2. MODEL NUMBERS AND FAN SELECTION ARE BASED ON MANUFACTURER INDICATED WITH THE FOLLOWING ACCESSORIES SCHEDULED:

ACCESSORIES:
1. BACKDRAFT DAMPER
2. THERMOSTAT
3. BIRDSCREEN
4. ROOF CURB
5. FUSED DISCONNECT SWITCH
6. DRAIN
7. EQUIPMENT SUPPORTS
8. INLET SCREEN
9. CURB MOUNT ROOF JACK
10. SPEED CONTROLLER
11. WALL SHUTTER
12. VIBRATION ISOLATORS
13. WALL CAP
14. WALL SHUTTER - MOTORIZED
15. WEATHER COVER
16. 2 SPEED / 1 WINDING
17. FILTERS
18. WALL COLLAR
19. FAN GUARD / SCREEN
20. COMPANION FLANGES
21. INSULATED HOUSING FOR SOUND CONTROL
22. HINGED FRAMES
23. SPARK / EXPLOSION PROOF
24. U.L. LISTED FOR SMOKE REMOVAL
25. SPECIAL COATING: AIR DRY PHENOLIC
26. TIE DOWN POINTS
27. TIME CLOCK SET TO BUSINESS HOURS
28. INTERLOCK WITH FIRE ALARM SYSTEM TO DE-ENERGIZE FAN WHEN A FIRE IS DETECTED

ELECTRIC DUCT HEATER

PLAN MARK	HEATER TYPE	MODEL	KW	STEPS	VOLT/ PHASE	SIZE	NOTES
EDH -1	SLIP IN	QUA	18	2	480/3	16 X 14	1,2,3
EDH -2	SLIP IN	QUA	18	2	480/3	16 X 14	1,2,3

NOTES:
1. BASIS OF DESIGN: INDEECO
2. COORDINATE EXACT SIZE OF HEATER WITH DUCTWORK SHOP DRAWINGS.
3. DUCT HEATERS TO BE CONTROLLED BY TWO STAGE THERMOSTAT.

AIR DISTRIBUTION SCHEDULE

SYMBOL/TAG	CFM	DUCT/NECK SIZE	FACE SIZE LENGTH	DESCRIPTION	IMAGE
A(XXX)	000-95 100-200 205-390 391-500 501-600	6 8 10 12 14	24x24 24x24 24x24 24x24 24x24	BASIS OF DESIGN: PRICE ASPD COLOR: WHITE MATERIAL: ALUMINUM OPPOSED BLADE DAMPERS: NO SQUARE TO ROUND ADAPTOR 12x12 FACE MAY BE USED IN HARD CEILINGS FOR AIRFLOWS LESS THAN 150 CFM.	
B(XXX)	000-1280	22x22	24x24	BASIS OF DESIGN: PRICE 630 COLOR: WHITE MATERIAL: ALUMINUM OPPOSED BLADE DAMPERS: NO s" SPACING FIXED LOUVERS 22"x22"x3" BACK CAN FOR DUCT CONNECTION. PAINTED FLAT BLACK.	
C(XXX)	000-95 100-150 155-390 391-500 501-600	6 8 10 12 14	12x12 12x12 24x24 24x24 24x24	BASIS OF DESIGN: PRICE ASPD COLOR: WHITE MATERIAL: ALUMINUM OPPOSED BLADE DAMPERS: NO SQUARE TO ROUND ADAPTOR	
D(XXX)	300	12x10		BASIS OF DESIGN: PRICE 6200 COLOR: WHITE MATERIAL: ALUMINUM OPPOSED BLADE DAMPERS: YES DOUBLE DEFLECTION 3/4" SPACING	
E(XXX)	4 FT LONG PLENUM WITH 8" INLET REFER TO PLANS FOR AIRFLOW AT DEVICES			BASIS OF DESIGN: PRICE - MODEL "AS" COLOR: WHITE MATERIAL: ALUMINUM OPPOSED BLADE DAMPERS: NO (1) - 1" SLOT WITH PATTERN CONTROLLER. PROVIDE WITH PLENUM AND EXPOSED FRAME FOR SIDEWALL APPLICATION	
F(XXX)	3 FT LONG PLENUM WITH 6" INLET REFER TO PLANS FOR AIRFLOW AT DEVICES			BASIS OF DESIGN: PRICE - MODEL "AS" COLOR: WHITE MATERIAL: ALUMINUM OPPOSED BLADE DAMPERS: NO (1) - 1" SLOT WITH PATTERN CONTROLLER. PROVIDE WITH PLENUM AND EXPOSED FRAME FOR SIDEWALL APPLICATION	
G(XXX)	4 FT LONG OPEN PLENUM WITH LIGHT SHIELD AT DEVICES			BASIS OF DESIGN: PRICE - MODEL "AS" COLOR: WHITE MATERIAL: ALUMINUM OPPOSED BLADE DAMPERS: NO (1) - 1" SLOT, PROVIDE WITH OPEN PLENUM AND LIGHT SHIELD FOR RETURN-AIR APPLICATION	

NOTES:
1. AIR DISTRIBUTION DEVICES LOCATED WITHIN ACOUSTICAL TILE CEILINGS SHALL BE PROVIDED WITH BORDER TYPE FOR LAY-IN MOUNTING. AIR DISTRIBUTION DEVICES LOCATED WITHIN GYPSUM BOARD CEILINGS OR WALLS SHALL BE PROVIDED WITH BORDER TYPE FOR SURFACE MOUNTING. REFER TO ARCHITECTURAL DOCUMENTS FOR CEILING TYPES. PROVIDE TRIM-RING FOR SQUARE CONE DIFFUSERS LOCATED WITHIN GYPSUM BOARD CEILINGS.
2. AIR DISTRIBUTION DEVICES LOCATED IN SMALL ROOMS WHERE FULL 24"x24" GRID ARE NOT AVAILABLE SHALL BE PROVIDED WITH SURFACE MOUNTING BORDERS IN LIEU OF LAY-IN. SECURE EACH DEVICE TO CEILING GRID WITH FIELD-FABRICATED SUPPORTS.
3. MAXIMUM SOUND RATING FOR ALL AIR DEVICES 25 NC.
4. PROVIDE SECTORIZING BAFFLES IN SUPPLY AIR DEVICES TO DIRECT AIR AS INDICATED ON FLOOR PLANS WITH DIRECTIONAL ARROWS SHOWN.

JUAN-JOSE BENITEZ
85646
LICENSED
PROFESSIONAL ENGINEER
11-20-2020

VOLT AIR
CONSULTING ENGINEERS
5353 W. Alabama ST. SUITE 205
Houston, Texas 77056
Tel: 832.371.6181
www.VoltAirEngineers.com
Firm#: F-14583 Project #02.02.007

UNIVERSAL MATTER
900 SOUTH LOOP WEST, SUITE 175
HOUSTON TX 77054

Cyril architects
planning . architecture . interior

REVISION NOTES

Mk	Date	Description

SHEET DATA

Cyril Arch. Proj. No.: 20106

Issued For: PERMIT

Project Status

Issue Date: 11/20/2020

MECHANICAL SCHEDULES

M801

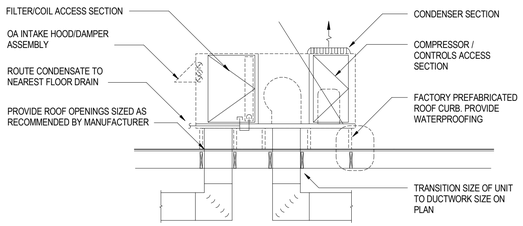

NOTES

1. ANCHOR OR SECURE RTU CURB TO ROOF STRUCTURE WITH THROUGH BOLTS. PROVIDE A MINIMUM OF THREE BOLTS PER SIDE OF CURB BASE.
2. ANCHOR OR SECURE UNIT TO CURB WITH LAG BOLTS THROUGH THE CURB NAILER. PROVIDE A MINIMUM OF THREE BOLTS PER SIDE OF UNIT. COORDINATE WITH STRUCTURAL AND PRODUCT REQUIREMENTS.
3. COORDINATE CURB HEIGHT WITH THERMAL INSULATION AND ROOFING MATERIAL THICKNESS.
4. COORDINATE PROPER WATERPROOFING OF CURB INTERFACE WITH ROOFING MATERIALS.
5. PROVIDE NEOPRENE PAD BETWEEN UNIT AND CURB.

ROOF TOP UNIT MOUNING DETAIL — G

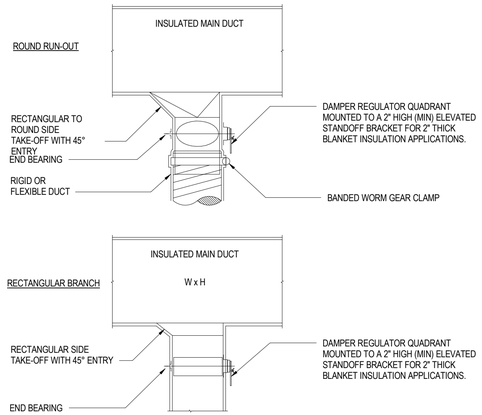

BRANCH TAKE-OFFS — E

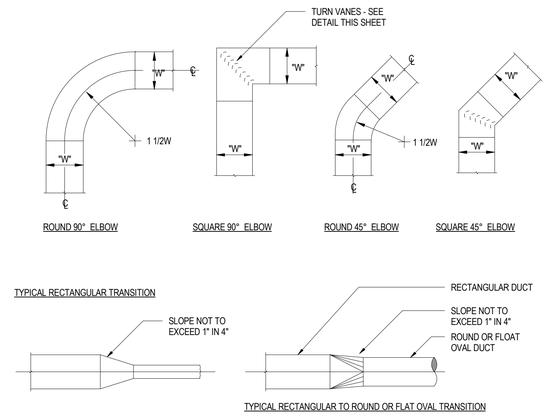

DUCT FITTINGS DETAIL — C

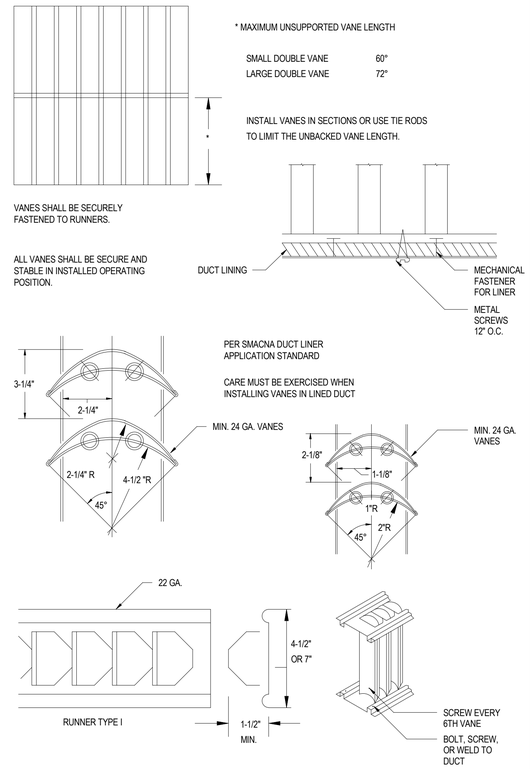

TURNING VANES & DUCT TRANSITION — A

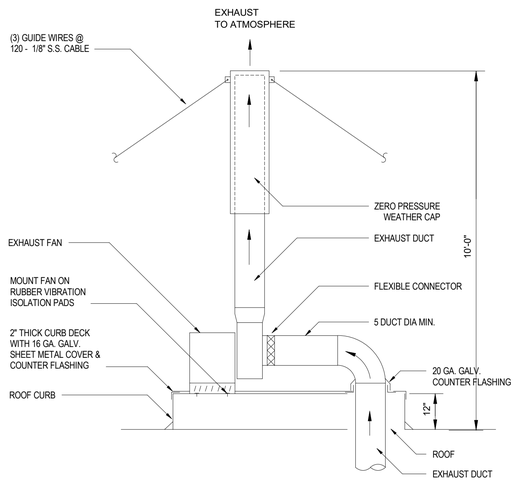

SIDE DISCHARGE UPBLAST EXHAUST FAN DETAIL — H

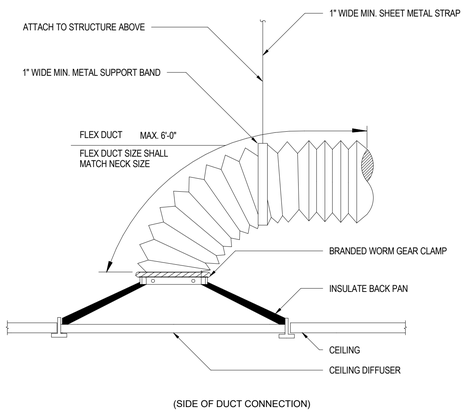

TYPICAL SUPPLY DIFFUSER CONNECTION — F

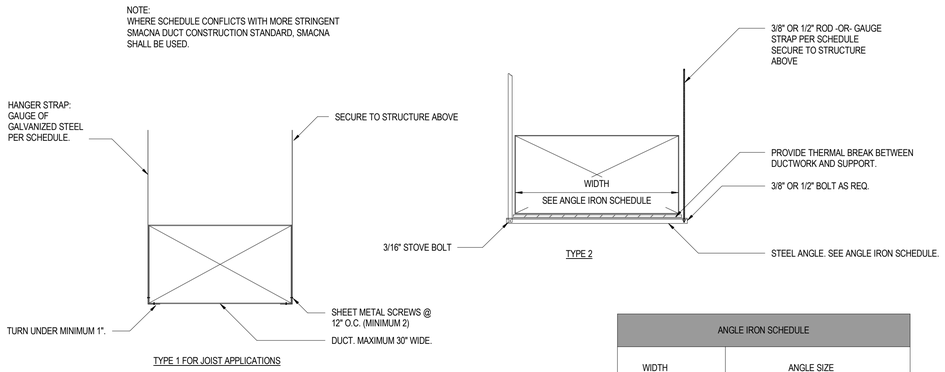

ANGLE IRON SCHEDULE	
WIDTH	ANGLE SIZE
31" THRU 42"	1-1/2" x 1-1/2" x 1/8"
43" THRU 60"	1-1/2" x 1-1/2" x 1/8"
61" THRU 84"	2" x 2" x 1/4"
85" & OVER	2" x 2" x 1/4"

TYPICAL DUCT SUPPORT DETAILS (CONCEALED LOCATIONS) — D

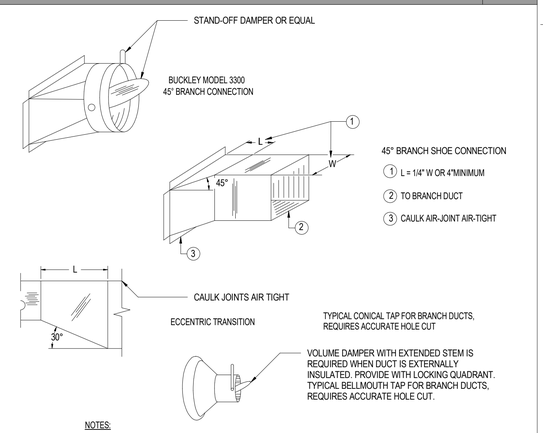

NOTES:

1. CROWN 3210-DS2 OR EQUIVALENT. (3300-DS2 FOR 45 DEG TAKE-OFF).
2. WINGNUT ON SHAFT IS UNACCEPTABLE. WINGNUT MUST RIDE ON LOCKING QUADRANT.
3. GASKET MATERIAL ON OUTBOARD FLANGE.
4. MUST MEET SMACNA GAUGE STANDARDS AND 2" W.G. PRESSURE.
5. CONTINUOUS WELD LONGITUDINAL SEAM FOR NO LEAKAGE AT 2" W.G. STATIC PRESSURE.

TAKEOFF FITTING DETAIL — B

VOLT AIR CONSULTING ENGINEERS
5353 W. Alabama ST. SUITE 205
Houston, Texas 77056
Tel: 832-371.5181
www.VoltAirEngineers.com
Firm#: F-14583 Project #02.02.007

JUAN-JOSE BENITEZ 85646 LICENSED PROFESSIONAL ENGINEER 11-20-2020

UNIVERSAL MATTER
900 SOUTH LOOP WEST, SUITE 175
HOUSTON TX 77054

Cyril architects
planning . architecture . interior

REVISION NOTES

Mk	Date	Description

SHEET DATA

Cyril Arch. Proj. No.: 20106
Issued For: PERMIT
Project Status
Issue Date: 11/20/2020

MECHANICAL DETAILS

M901